SANDHYA ENTERPRISES

AN ISO 9001:2015 Certified Company
Address: 5-24-1223/8/1, Ambedkar Nagar, Gajularamaram, Hyderabad – 500055.
AN ISO 9001:2015 Certified Company
Contact No: 9652998932
GSTIN: 36GNLPS1299P1ZS
Email : sandhyaprises@gmail.com
Website: www.sandhyaflex.com
WhatsApp: 9652998932
YouTube: www.youtube.com/c/SANDHYAENTERPRISES
Website : http://www.sandhyaflex.com/pvc-water-...
Request a Quote : https://www.sandhyaflex.com/contactus-1.php

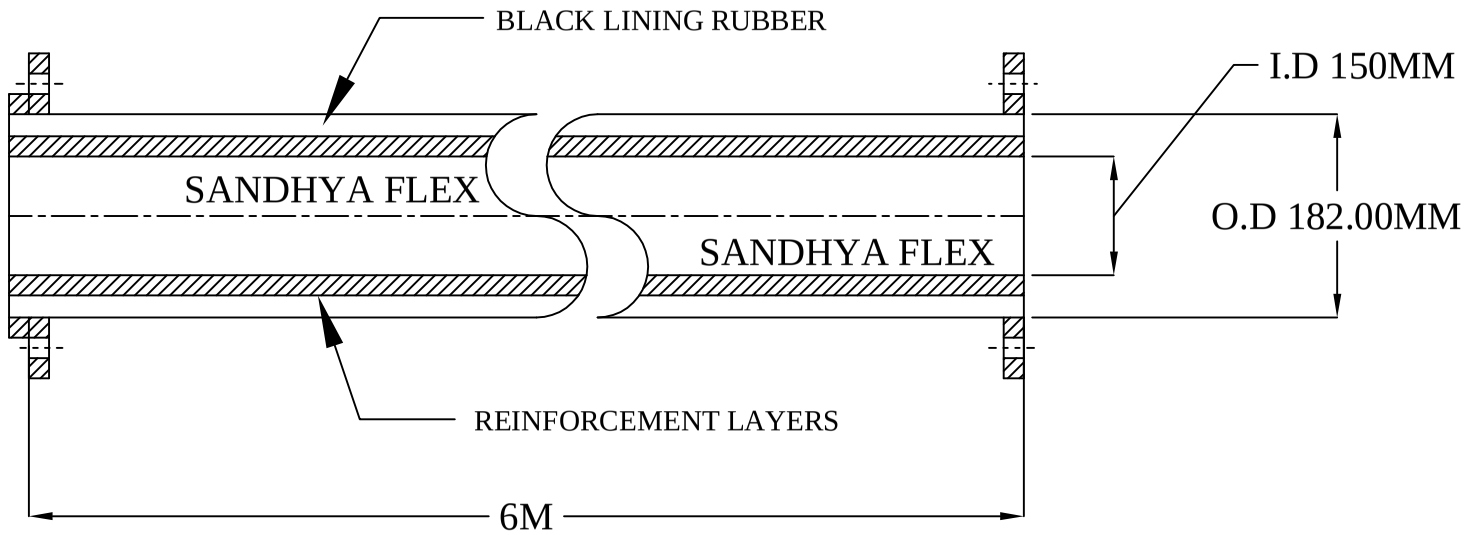

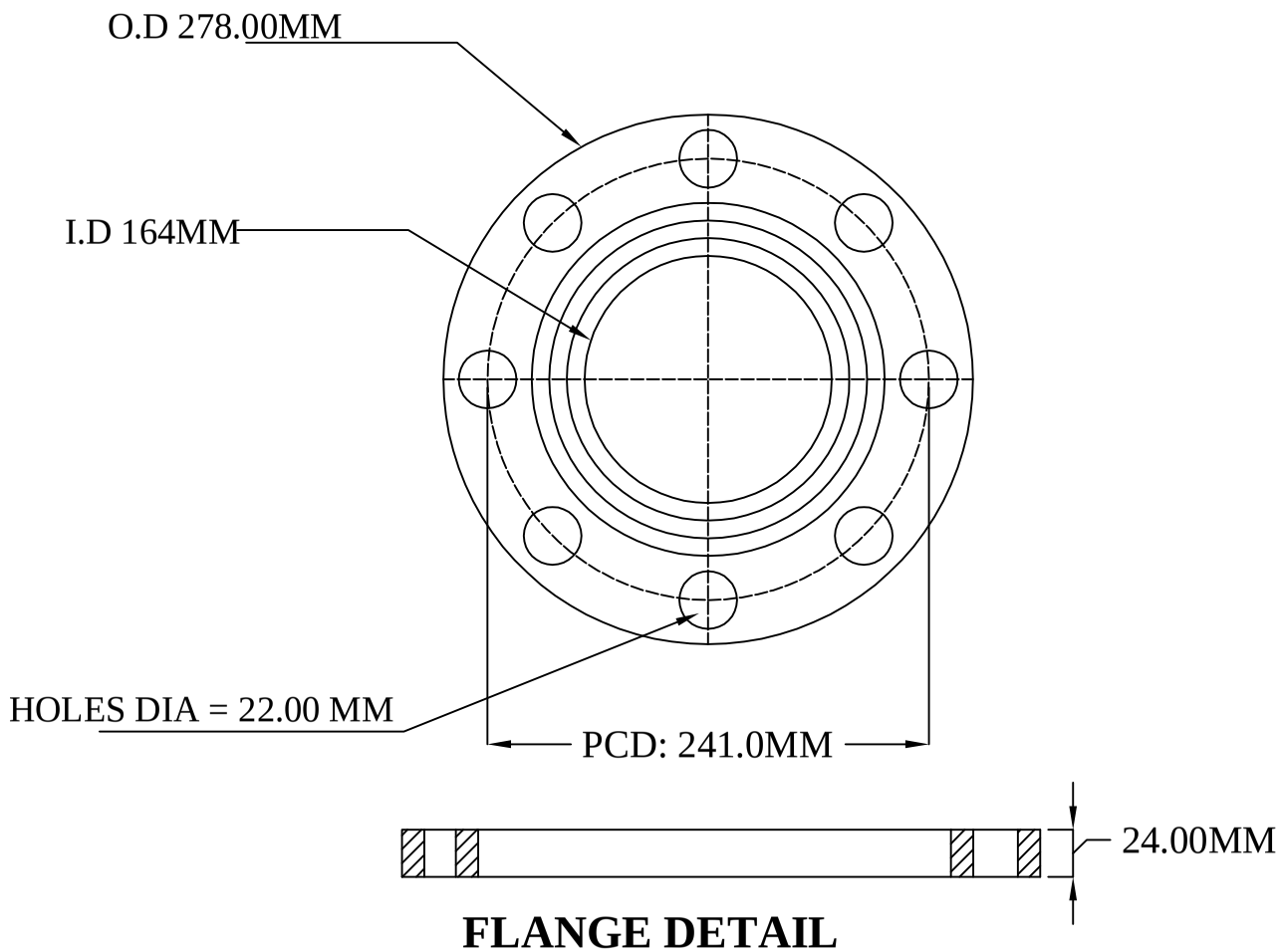

FLANGE DETAIL

FLANGE DIMENSION OF CLASS 150 FLANGE AS PER ANSI B 16.5

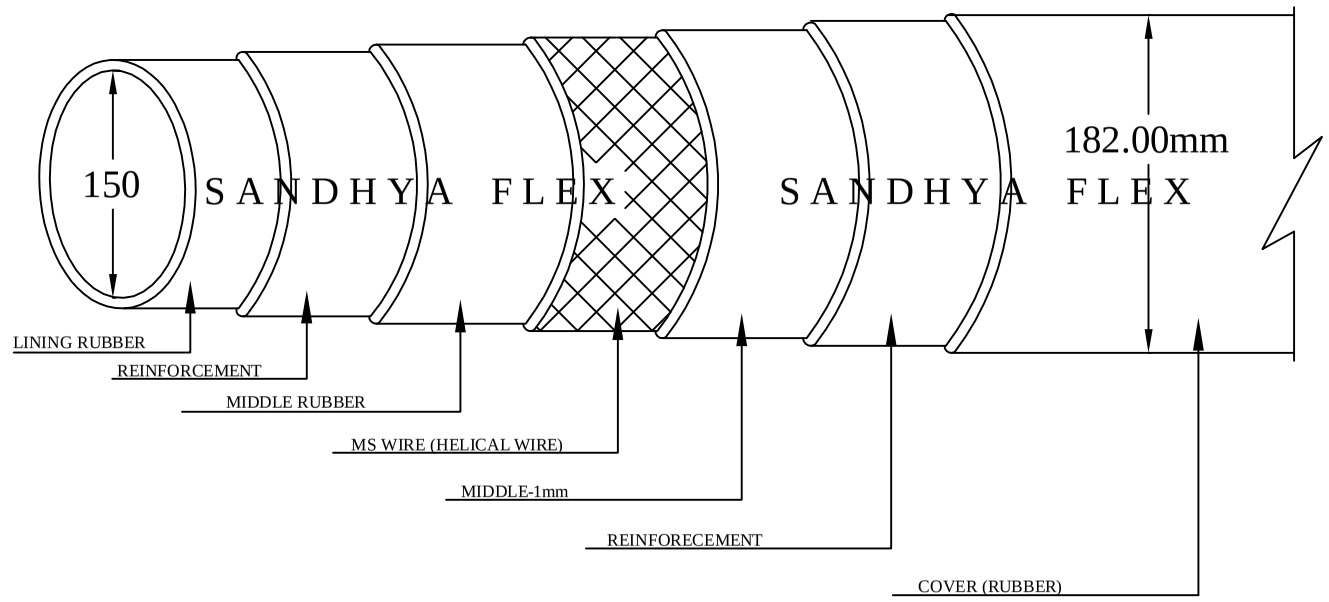

MOC OF RUBBERR HOSE

TITLE: SLURRY RUBBER HOSE WITH BOTH END FIXED M.S FLANGE PRESSURE: 25 KG/CM2 MAKE: SANDHYA FLEX	DRAWING NO: SE/150ID/2020-2021	DRAWN BY: MD RAHMATH ALI (B.TECH, CIVIL ENGG) CHECEKD BY: MITHILESH CHAUDHARY	SANDHYA ENTERPRISES HYDERABAD